Wilcoxon Research

Model 787A
Low profile, general purpose accelerometer

Features

- Corrosion resistant
- Hermetic design
- Ground isolated
- ESD protection
- Reverse wiring protection
- Mounts in any orientation

Dynamic

Sensitivity, ±10%, 25°C	100 mV/g
Acceleration range	80 g peak
Amplitude nonlinearity	1%
Frequency response:	
±10%	1.0 - 5,000 Hz
±3 dB	0.7 - 10,000 Hz
Resonance frequency	22 kHz
Transverse sensitivity, max	5% of axial
Temperature response	–50°C –5% +120°C +5%

Electrical

Power requirement:	voltage source	18 - 30 VDC
	current regulating diode	2 - 10 mA
Electrical noise, equiv. g:		
Broadband	2.5 Hz to 25 kHz	700 µg
Spectral	10 Hz	10 µg/√Hz
	100 Hz	5 µg/√Hz
	1000 Hz	5 µg/√Hz
Output impedance, max		100 Ω
Bias output voltage		12 VDC
Grounding		case isolated, internally shielded

Environmental

Temperature range	–50 to 120°C
Vibration limit	500 g
Shock limit, min	5,000 g
Electromagnetic sensitivity, equiv. g, max	70 µg/gauss
Sealing	hermetic
Base strain sensitivity, max	0.002 g/µstrain

Physical

Sensing element design	PZT ceramic / shear
Weight	145 grams
Case material	316L stainless steel
Mounting	1/4 - 28 captive hex head screw with 0.046" diameter safety wire hole
Output connector	2 pin, MIL-C-5015 style
Mating connector	R6 type
Recommended cabling	J10 / J9T2A

Connector pin	Function	Cable conductor color
Shell	ground	Shield
A	power/ signal	White
B	common	Black

Accessories supplied: #80165-01 captive hex head screw; calibration data (level 2).

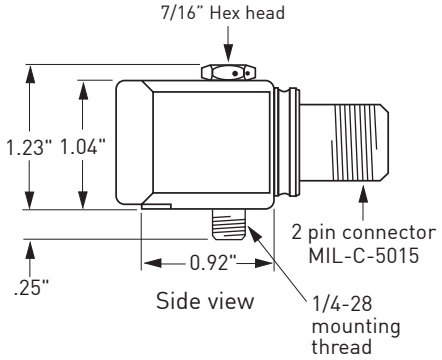

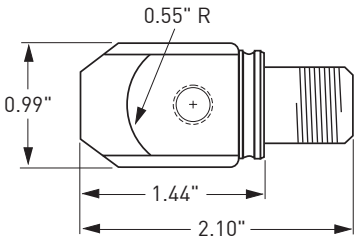

Bottom view

Wilcoxon Research Inc
20511 Seneca Meadows Parkway
Germantown, MD 20876
USA

Tel: 301 330 8811
Fax: 301 330 8873
Email: wilcoxon@meggitt.com

www.meggitt.com

MEGGITT
smart engineering for
extreme environments

98493 Rev.D.3 12/07

Due to continued research and product development, Wilcoxon Research reserves the right to amend this specification without notice.